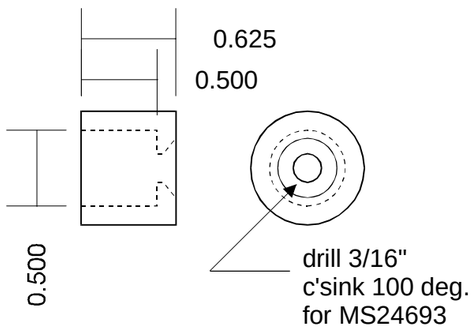

release button cap
mat'l 3/4" aluminum bar

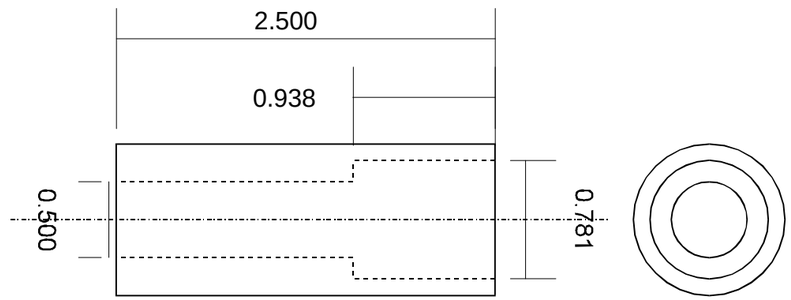

handle outer tube
mat'l 1" delrin rod

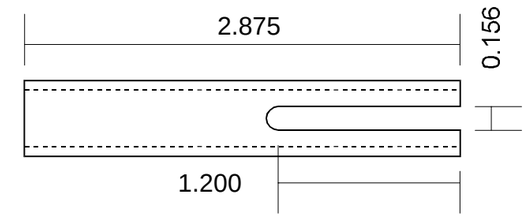

Inner handle tube
mat'l 1/2" OD, .058" wall
4130 steel tube

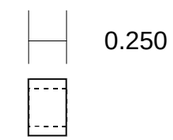

locking pin ferrule
2 req'd
mat'l 3/8" OD, .065" wall
4130 steel

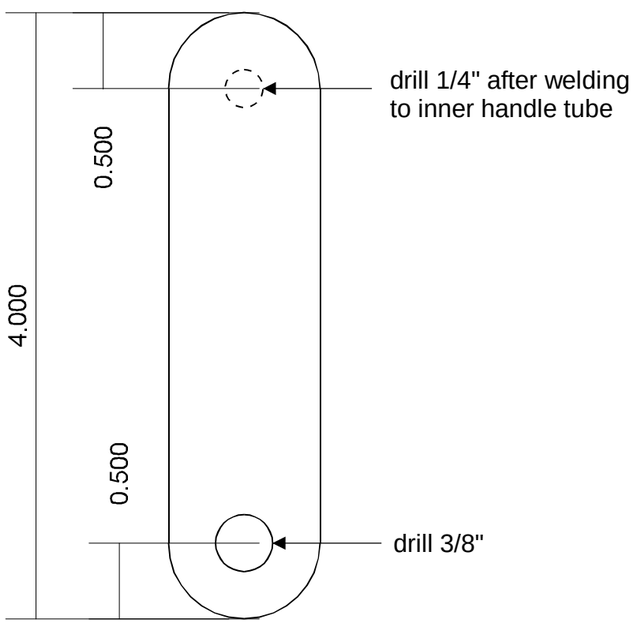

crank arm
mat'l 1" x 3/16"
4130 steel strip

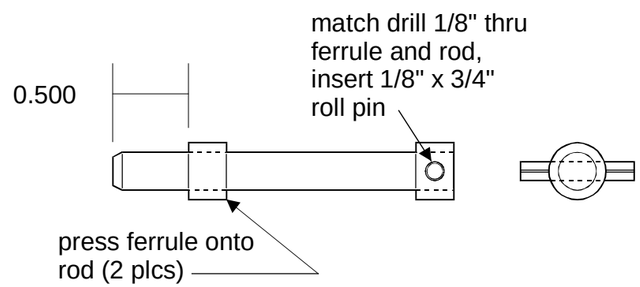

locking pin assembly

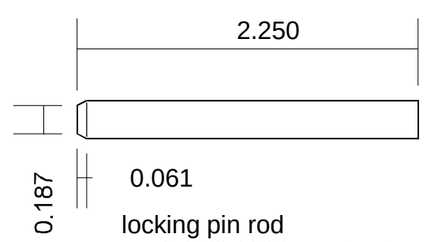

locking pin rod
mat'l 1/4" 4130 steel rod

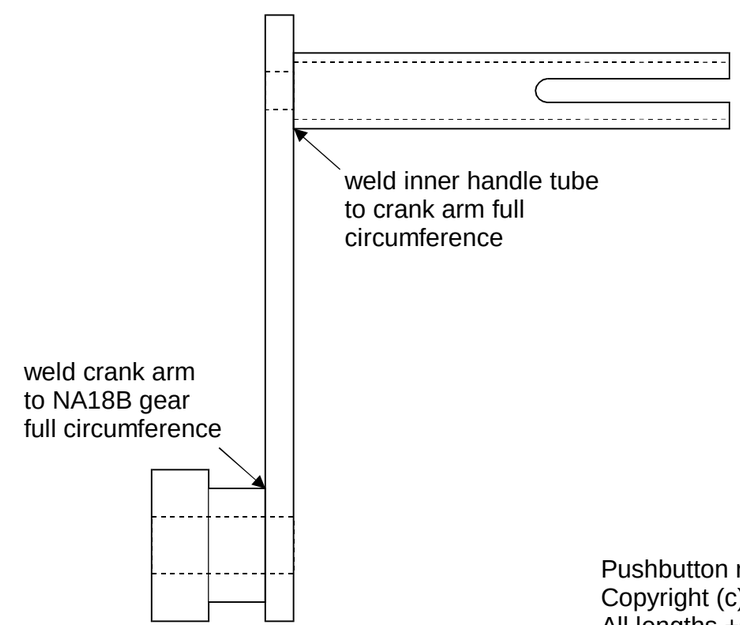

crank assembly

Pushbutton release flap crank parts
Copyright (c) 2001 HP Aircraft, LLC
All lengths +0/-.025
All ODs +0/-.005
All IDs +.005/-0